Gas-actuated thermometer with switch contacts
For sanitary applications
Model 74, stainless steel version

WIKA data sheet TV 27.02

Applications

- Food industry
- Sanitary applications
- Bio and pharmaceutical industry

Special features

- Dead-space free, hygienic version
- Aseptic process connections
- Material and surface finish quality in accordance with pharmaceutical industry directives and standards
- Gauges with inductive contact for use in hazardous areas with ATEX approval

Gas-actuated thermometer with switch contact, model 74 with liquid damping and VARIVENT® connection

Description

This series of thermometers has been designed as an addition to the standard range of thermometers in order to meet the special requirements of the food, bio and pharmaceutical industries as well as in the paints and varnishes industry.

The model 74 gas-actuated thermometer is ideally suited to fulfil the high standard requirements of sanitary applications. Based on a third party verification, the thermometer complies with the 3-A standard and is marked by us accordingly.

Stem and case are made of stainless steel.
The surface of the wetted parts is polished, and a wide variety of process connections is available to ensure the optimal adaptation to many different process requirements. The stem is free of dead space.

Switch contacts (electrical alarm contacts) make or break an electric control circuit dependent upon the position of the instrument pointer. The switch contacts are adjustable over the full measuring range.

The instrument pointer actual value pointer) moves freely across the entire scale range, independent of the setting. The set pointer can be adjusted via the window using a removable adjustment key (mounted on the terminal box).

Switch contacts consisting of several contacts can also be set to a single set point. Contact actuation is made when the actual value pointer travels beyond or below the desired set point.

For switch contacts, sliding and magnetic snap-action contacts, inductive contacts - for requirements to ATEX - or electronic contacts for PLC switching are available.

Data sheets showing similar products and accessories:
Electrical switch contacts; models 821, 831, 830 E, 851; see data sheet AC 08.01

Part of your business

Standard version

Measuring principle
Gas-pressure inert gas filling, physiologically safe

Nominal size in mm
100

Process connection
- VARIVENT® connection
  for pipes DN 40 to DN 125 and 1 ½" to 4", PN 25
- NEUMO BioControl®
  size 50 (mounting diameter 50 mm) for pipes DN 25 to DN 100, PN 16 or
  size 65 (mounting diameter 68 mm) for pipes DN 40 to DN 100, PN 16
- Grooved union nut DIN 11851, DN 40, PN 40 or DN 50, PN 25
- Tri-clamp, DN 1 ½", PN 40 or DN 2", PN 40

Instrument version
- Back mount (axial)
- Lower mount (radial)

Accuracy class
Class 1 per DIN 16196
at 23 °C ±10 °C ambient temperature

Working range

Normal (1 year):	Measuring range (DIN 16196)
Short time (24 h max.):	Scale range (DIN 16196)

Rated operating ranges and conditions
DIN 16196

Temperature sensor
Wetted parts 1.4435 stainless steel
Diameter 21 mm
Length 30 mm

Surface of the wetted parts
$R_a \leq 0.8$ µm

Case
Stainless steel 1.4301

Bezel ring
Cam ring (bayonet type) bezel, stainless steel 1.4301

Dial
Aluminium, white, black lettering

Window
Laminated safety glass

Pointer
Aluminium, black, adjustable pointer

Electrical connection
Terminal box

Temperature limits for storage and transport
-50 … +70 °C without liquid damping
-40 … +70 °C with liquid damping

Permissible ambient temperature
-20 … +60 °C without/with liquid damping

Permissible working pressure at the temperature sensor
max. 25 bar, static

Ingress protection
IP 65 per EN/IEC 60529

Scale range, measuring range [1], error limit
Scale graduation per WIKA standard

Scale range in °C	Measuring range in °C	Scale spacing in °C	Error limit ±°C
-30 ... +50	-20 ... +40	1	1.5
-20 ... +100	0 ... 80	2	3
0 ... 120	20 ... 100	2	3
0 ... 160	20 ... 100	2	3

1) The measuring range is indicated on the dial by two triangular marks.
The stated error limit is valit within this range per DIN 16196.

VARIVENT® is a registered trademark of the company GEA Tuchenhagen.
BioControl® is a registered trademark of the company NEUMO.

Switch contacts

Sliding contact model 811
- Simple construction
- No control unit and no extra power supply required
- Direct switching up to max. 230 V, 18 VA / 10 W

Magnetic snap-action contact model 821
- Simple construction
- No control unit and no extra power supply required
- Direct switching up to max. 230 V, 50 VA / 30 W
- Up to 4 switch contacts per measuring instrument

Inductive contact model 831
- Long service life due to non-contact sensor
- Additional control unit required
- With corresponding control unit suitable for use in zone 1 / 21 (2 GD) hazardous areas
- Low effect on the indication accuracy
- Fail-safe switching at high switching rates
- Insensitive to corrosion
- Also in safety version (SN, S1N contact)
- Up to 3 switch contacts per measuring instrument

Electronic contact model 830 E
- For direct triggering of a programmable logic controller (PLC)
- No additional control unit required
- Long service life due to non-contact sensor
- Low effect on the indication accuracy
- Fail-safe switching at high switching rates
- Insensitive to corrosion
- Up to 3 switch contacts per measuring instrument

Switching function
The switching function of the switch is indicated by function index 1, 2 or 3.

Model 8xx.1:	Contact makes (clockwise pointer motion)
Model 8xx.2:	Contact breaks (clockwise pointer motion)
Model 8xx.3:	Change over; one contact breaks and one contact makes simultaneously when pointer reaches set point

Please indicate switch points!
Unless otherwise specified, the instrument will be delivered with the adjustable switching points factory-set as follows:

Single contact	Start of measuring range
Double contact	Start and end of the measuring range
Triple contact	Start, middle and end of the measuring range

Note
For magnetic snap-action contacts, it does not make sense to test the display, around the set limit values, in the range ±5 % of the measuring span, because the magnet has an influence on the indication accuracy.

For further information see data sheet AC 08.01, "Electrical switch contacts"

Options

- Scale range °F, °C/°F (dual scale)
- Other process connection
- Surface of the wetted parts
  - $R_a \leq 0.4$ µm
  - Electropolished $R_a \leq 0.4$ µm
  - Polished and electropolished $R_a \leq 0.25$ µm
- Case with food-compatible liquid damping (medicinal white mineral oil KN 92)
- Window from clear non-splintering plastic
- Inductive contacts also in safety version
- Case in stainless steel 1.4571
- Version per ATEX Ex II 2 GD c TX
- Ambient temperature: -40 ... +60 °C (for SN contact)

Dimensions in mm

Back mount, standard version

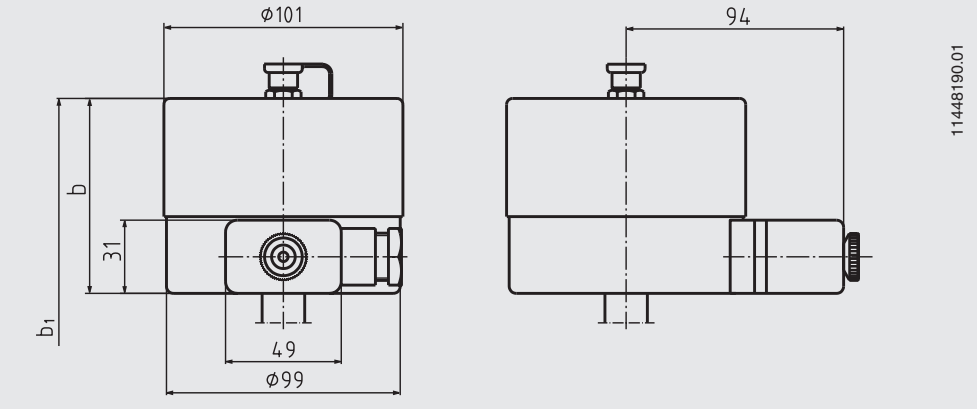

Lower mount, standard version

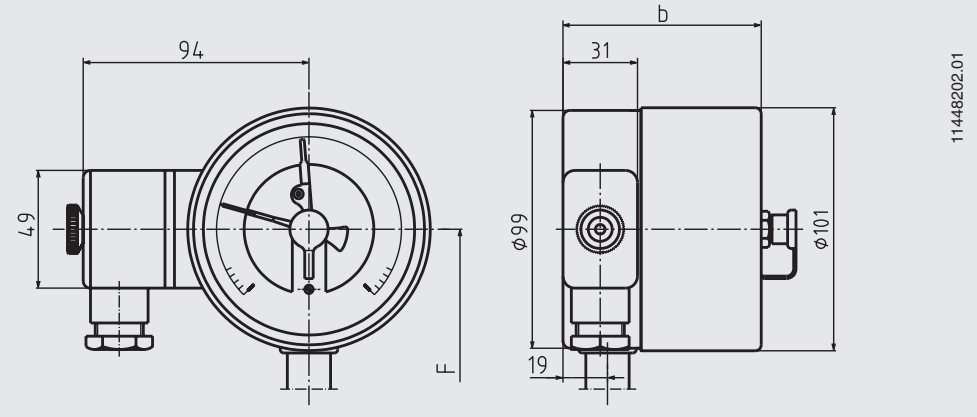

Nominal size	Dimensions in mm					Weight in kg
	Switch contact models 811, 821 or 831					
	1- or 2-way		3-way			
NS	b	b_1 1)	b	b_1 1)	F 1)	
100	88	120	-	-	82	1.1

1) With scale ranges ≥ 0 ... 500 °C the dimensions increase by 40 mm

Process connections

Type of process connection: Clamp connection

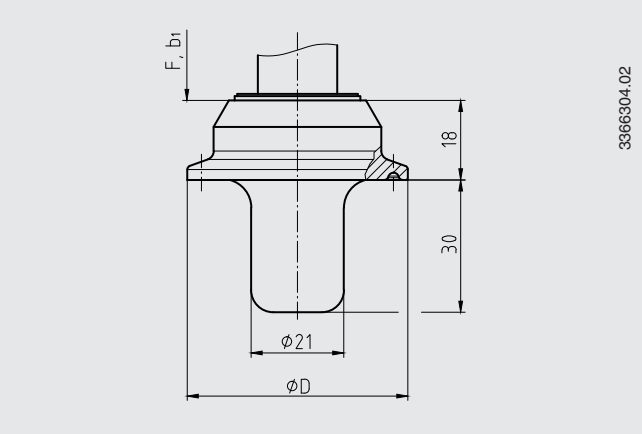

Type of process connection: Clamp connection per DIN 32676
Pipe standard: Pipes per DIN 11866 row B or ISO 1127 row 1

DN	For pipe	PN [1]	Dimensions in mm
	Outer Ø x wall thickness		Ø D
33.7 (DN 25)	33.7 x 2	40	50
42.4 (DN 32)	42.4 x 2	40	50
48.3 (DN 40)	48.3 x 2	40	64
60.3 (DN 50)	60.3 x 2	40	77.5
76.1 (DN 65)	76.1 x 2	25	91

Type of process connection: Clamp connection per DIN 32676
Pipe standard: Pipes per DIN 11866 row C or ASME BPE

DN	For pipe	PN [1]	Dimensions in mm
	Outer Ø x wall thickness		Ø D
1 ½"	38.1 x 1.6	40	50
2"	50.8 x 1.6	40	64
2 ½"	63.5 x 1.6	25	77.5
3"	76.2 x 1.6	25	91

Type of process connection: Clamp connection
Pipe standard: Pipes per BS4825 part 3 and O.D. tube

DN	For pipe	PN [1]	Dimensions in mm
	Outer Ø x wall thickness		Ø D
1 ½"	38.1 x 1.65	40	50
2"	50.8 x 1.65	40	64
2 ½"	63.5 x 1.65	25	77.5
3"	76.2 x 1.65	25	91

Type of process connection: Clamp connection per DIN 32676
Pipe standard: Pipes per DIN 11866 row A or DIN 11850 row 2

DN	For pipe	PN [1]	Dimensions in mm
	Outer Ø x wall thickness		Ø D
32	34 x 1	40	50
40	40 x 1	40	50
50	52 x 1	40	64
65	70 x 2	25	91

Type of process connection: Clamp connection per ISO 2852
Pipe standard: Pipes per ISO 2037 and BS 4825 part 1

DN	For pipe	PN [1]	Dimensions in mm
	Outer Ø x wall thickness		Ø D
33.7	33.7 x 1.2	25	50
38	38 x 1.2	25	50
40	40 x 1.2	25	64
51	51 x 1.2	25	64
63.5	63.5 x 1.6	25	77.5
70	70 x 1.6	25	91
76.1	76.1 x 1.6	25	91

1) For maximum pressure range consider pressure rating of clamp.

Type of process connection: Threaded connection per DIN 11851
Pipe standard: Pipes per DIN 11850 row 2

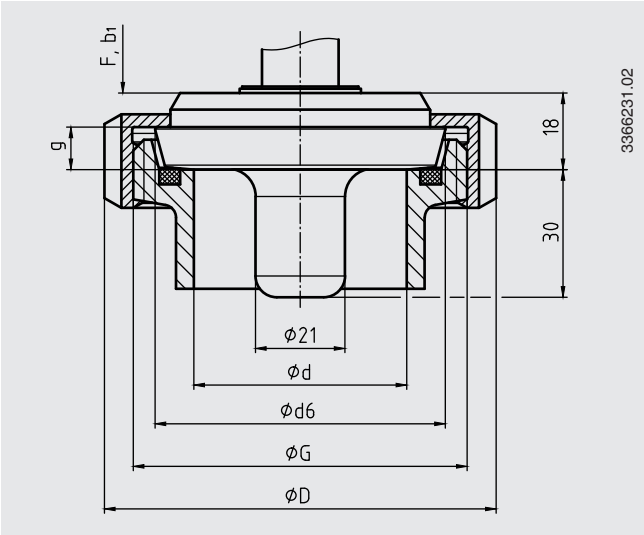

DN	For pipe	PN	Dimensions in mm				
	Outer Ø x wall thickness		G	d	D	d_6	g
40	41 x 1.5	40	Rd 65 x 1/6	38	78	56	10
50	53 x 1.5	25	Rd 78 x 1/6	50	92	68.5	10
80	85 x 2	25	Rd 110 x 1/4	20	127	100	12

3-A conformity only in combination with profile sealing from SKS Komponenten BV or Kieselmann GmbH.

Type of process connection: VARIVENT®

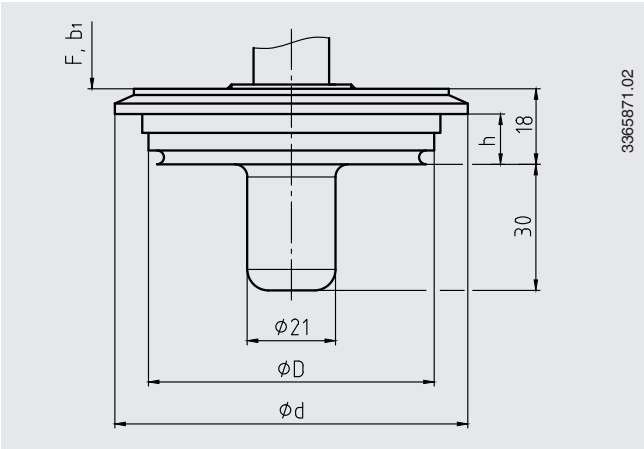

Access unit connection	PN [2]	Dimensions in mm		
		D	d	h
form F	25	50	66	12.3
form N	25	68	84	12.3

2) Pay attention to the pressure rating of the VARINLINE® access unit.

Note:
Suitable for installation into the VARINLINE® access unit from GEA Tuchenhagen.

Type of process connection: NEUMO BioControl®

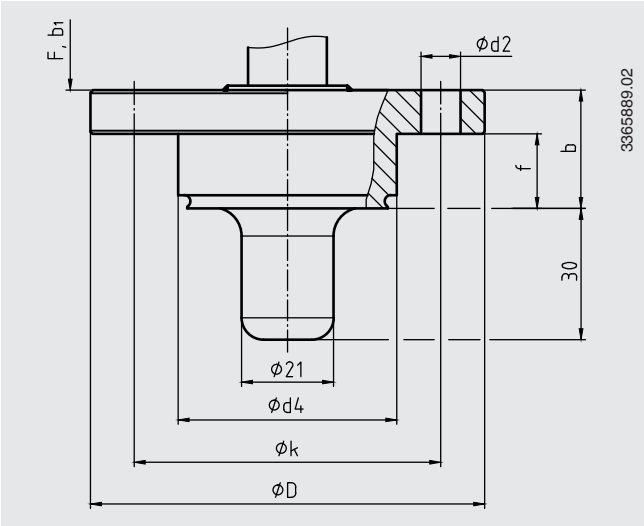

BioControl® connection	PN	Dimensions in mm					
		d_2	d_4	D	f	b	k
Size 50	16	4 x Ø 9	50	90	17	27	70
Size 65	16	4 x Ø 11	68	120	17	27	95
Size 80	16	4 x Ø 11	87.5	140	25	37	115

Type of process connection: Aseptic threaded pipe connection DIN 11864-1 form A

with liner and grooved union nut

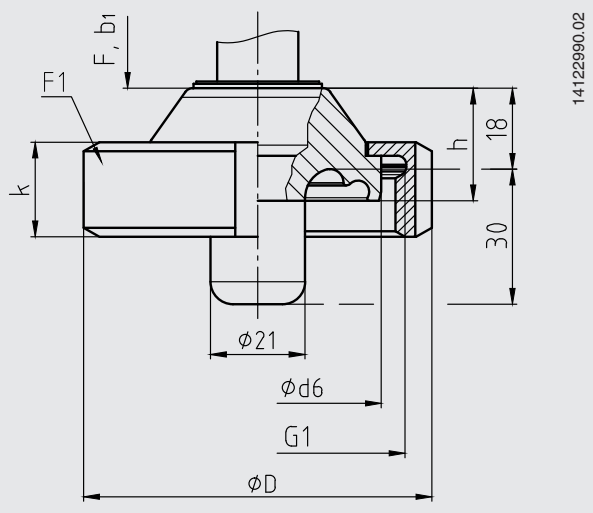

Type of process connection: Aseptic threaded pipe connection per DIN 11864-1 form A
Pipe standard: Pipes per DIN 11866 row A or DIN 11850 row 2

DN	For pipe	Dimensions in mm							Weight in kg	
	Outer Ø x wall thickness	d_6	G_1	h	F_1	D	k	Aseptic O-ring	Liner	Threaded coupling
40	41 x 1.5	54.9	RD 65 x 1/6	25	DN 40	78	21	40 x 5	1.5	1.5
50	53 x 1.5	66.9	RD 78 x 1/6	25	DN 50	92	22	52 x 5	2.2	2.3
65	70 x 2	84.9	RD 95 x 1/6	25	DN 65	112	25	68 x 5	3.6	3.6

Type of process connection: Aseptic threaded pipe connection per DIN 11864-1 form A
Pipe standard: Pipes per DIN 11866 row B or DIN ISO 1127 row 1

DN	For pipe	Dimensions in mm							Weight in kg	
	Outer Ø x wall thickness	d_6	G_1	h	F_1	D	k	Aseptic O-ring	Liner	Threaded coupling
42.4	42.4 x 2.0	54.9	RD 65 x 1/6	25	DN 40	78	21	40.5 x 5	1.5	1.5
48.3	48.3 x 2.0	66.9	RD 78 x 1/6	25	DN 50	92	22	46.5 x 5	2.2	2.3
60.3	60.3 x 2.0	84.9	RD 95 x 1/6	25	DN 65	112	25	58.5 x 5	3.6	3.6
76.1	76.1 x 2.0	98.9	RD 110 x 1/4	25	DN 80	127	29	73.5 x 5	5.0	4.9

Type of process connection: Aseptic threaded pipe connection per DIN 11864-1 form A
Pipe standard: Pipes per DIN 11866 row C or ASME BPE 1997

DN	For pipe	Dimensions in mm							Weight in kg	
	Outer Ø x wall thickness	d_6	G_1	h	F_1	D	k	Aseptic O-ring	Liner	Threaded coupling
1 ½"	38.1 x 1.65	54.9	RD 58 x 1/6	25	DN 40	78	21	37 x 5	1.5	1.5
2"	50.8 x 1.65	66.9	RD 65 x 1/6	25	DN 50	92	22	50 x 5	2.2	2.3
2 ½"	63.5 x 1.65	84.9	RD 78 x 1/6	25	DN 65	112	25	62 x 5	3.6	3.6
3"	76.2 x 1.65	98.9	RD 95 x 1/6	25	DN 80	127	29	75 x 5	5.0	4.9

Type of process connection: Aseptic flange connection DIN 11864-2 form A

with flange with notch

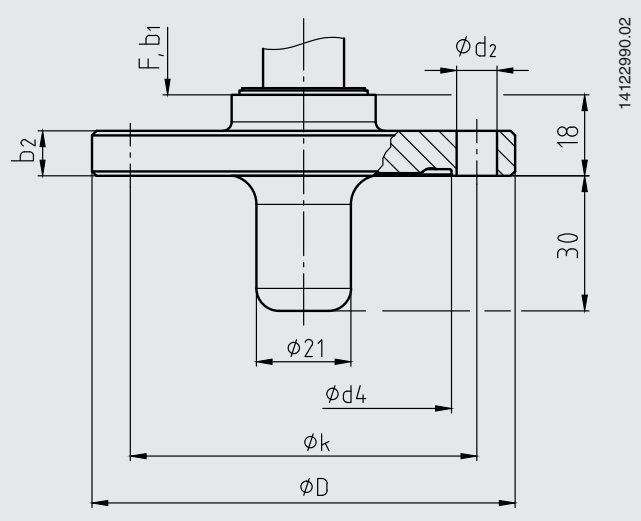

Type of process connection: Aseptic flange connection per DIN 11864-2 form A
Pipe standard: Pipes per DIN 11866 row A or DIN 11850 row 2

DN	For pipe	PN 3)	Dimensions in mm					
	Outer Ø x wall thickness		d_4	K	D	b_2	d_2	Aseptic O-ring
40	41 x 1.5	25	53.7	65	82	10	4 x Ø 9	40 x 5
50	53 x 1.5	16	65.7	77	94	10	4 x Ø 9	52 x 5
65	70 x 2.0	16	81.7	95	113	10	8 x Ø 9	68 x 5
80	85 x 2,0	16	97,7	112	133	12	8 x Ø 11	83 x 5

Type of process connection: Aseptic flange connection per DIN 11864-2 form A
Pipe standard: Pipes per DIN 11866 row B or DIN ISO 1127 row 1

DN	For pipe	PN 3)	Dimensions in mm					
	Outer Ø x wall thickness		d_4	K	D	b_2	d_2	Aseptic O-ring
42.4	42.4 x 2.0	16	54.1	65	82	10	4 x Ø 9	40.5 x 5
48.3	48.3 x 2.0	16	60	71	88	10	4 x Ø 9	46.5 x 5
60.3	60.3 x 2.0	16	72	85	103	10	8 x Ø 9	58.5 x 5
76.1	76.1 x 2.0	16	88.1	104	125	12	8 x Ø 11	73.5 x 5

Type of process connection: Aseptic flange connection per DIN 11864-2 form A
Pipe standard: Pipes per DIN 11866 row C or ASME BPE 1997

DN	For pipe	PN 3)	Dimensions in mm					
	Outer Ø x wall thickness		d_4	K	D	b_2	d_2	Aseptic O-ring
1 ½"	38.1 x 1.65	25	50.4	62	79	10	4 x Ø 9	37 x 5
2"	50.8 x 1.65	16	63.5	75	92	10	4 x Ø 9	50 x 5
2 ½"	63.5 x 1.65	16	75.9	89	107	10	4 x Ø 9	62 x 5
3"	76.2 x 1.65	16	89.6	104	125	12	8 x Ø 11	75 x 5

3) Permissible pressure in bar; these pressures may only be applied when using suitable sealing materials up to a temperature from -10 to +140 °C.

Type of process connection: Aseptic clamp connection DIN 11864-3 form A

with clamp with notch

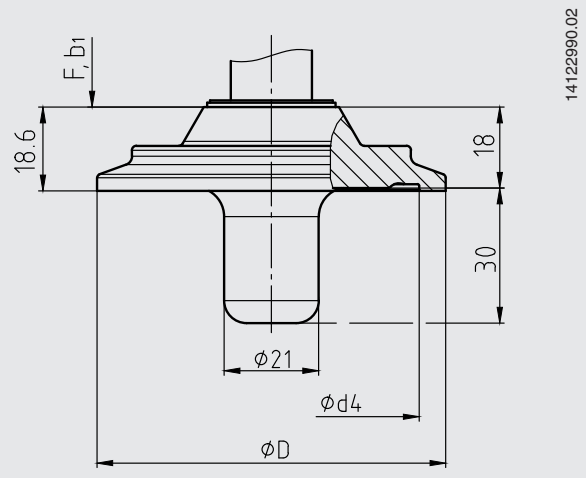

Type of process connection: Aseptic clamp connection per DIN 11864-3 form A
Pipe standard: Pipes per DIN 11866 row A or DIN 11850 row 2

DN	For pipe	PN 3)	Dimensions in mm		
	Outer Ø x wall thickness		d_4	D	Aseptic O-ring
40	41 x 1.5	40	53.7	64	40 x 5
50	53 x 1.5	25	65.7	77.5	52 x 5
65	70 x 2.0	25	81.7	91	68 x 5
80	85 x 2.0	25	97.7	106	83 x 5

Type of process connection: Aseptic clamp connection per DIN 11864-3 form A
Pipe standard: Pipes per DIN 11866 row B or DIN ISO 1127 row 1

DN	For pipe	PN 3)	Dimensions in mm		
	Outer Ø x wall thickness		d_4	D	Aseptic O-ring
42.4	42.4 x 2.0	25	54.1	64	40.5 x 5
48.3	48.3 x 2.0	25	60	64	46.5 x 5
60.3	60.3 x 2.0	25	72	91	58.5 x 5
76.1	76.1 x 2.0	16	88.2	106	73.5 x 5

Type of process connection: Aseptic clamp connection per DIN 11864-3 form A
Pipe standard: Pipes per DIN 11866 row C or ASME BPE 1997

DN	For pipe	PN 3)	Dimensions in mm		
	Outer Ø x wall thickness		d_4	D	Aseptic O-ring
1 ½"	38.1 x 1.65	40	50.5	64	37 x 5
2"	50.8 x 1.65	25	63.5	77.5	50 x 5
2 ½"	63.5 x 1.65	25	75.9	91	62 x 5
3"	76.2 x 1.65	16	89.6	106	75 x 5

3) Permissible pressure in bar; these pressures may only be applied when using suitable sealing materials up to a temperature from -10 to +140 °C.

Thermowell

In principle, the operation of a mechanical thermometer without a thermowell with low process-side loading (low pressure, low viscosity and low flow velocities) is possible.

However, in order to enable exchanging the thermometer during operation (e.g. instrument replacement or calibration) and to ensure a better protection of the instrument and also the plant and the environment, it is advisable to use a thermowell from the extensive WIKA thermowell portfolio.

For further information on the calculation of the thermowell, see Technical information IN 00.15.

CE conformity

ATEX directive (option)
94/9/EG, II 2 GD c TX

Approvals (options)

- **EAC**, import certificate, ignition protection type “c” - constructive safety, customs union Russia/Belarus/ Kazakhstan
- **3-A**, food, USA
- **CRN**, safety (e.g. electr. safety, overpressure, ...), Canada

Certificates (options)

- 2.2 Test report
- 3.1 inspection certificate
- DKD/DAkkS calibration certificate

Approvals and certificates, see website

Ordering information
Model / Nominal size / Type of contact and switching function / Scale range / Surface of the wetted parts / Process connection / Options

© 2010 WIKA Alexander Wiegand SE & Co. KG, all rights reserved.
The specifications given in this document represent the state of engineering at the time of publishing.
We reserve the right to make modifications to the specifications and materials.

WIKA Alexander Wiegand SE & Co. KG
Alexander-Wiegand-Straße 30
63911 Klingenberg/Germany
Tel. +49 9372 132-0
Fax +49 9372 132-406
info@wika.de
www.wika.de